FREAK ATHLETE

HYPER PRO X Assembly Guide

Important Notice

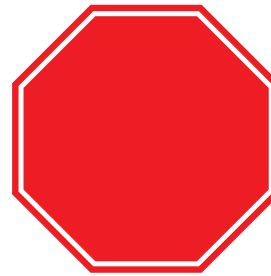

The written instruction manual is meant to be a supplement to the HPX Assembly video and Getting Started Video.

Go to *FreakAthlete.co/HPXGuide* for full video instructions.

It is critical to follow the full Assembly Video and the Getting Started video for your own safety.

FREAK ATHLETE

HYPER PRO X Guide

HPX
Full Assembly

HPX
Getting Started

Steps 1: Rear Wheel Base Installation	Hardware & Parts
1. Put the Main Frame in upright position. the back facing upward. 2. Place the Rear Wheel Base (the wheel facing the user) 3. Fasten and tighten using the Bolts, Nuts and Washer (See image below for refrence.)	● Main Frame ● Foot Plate

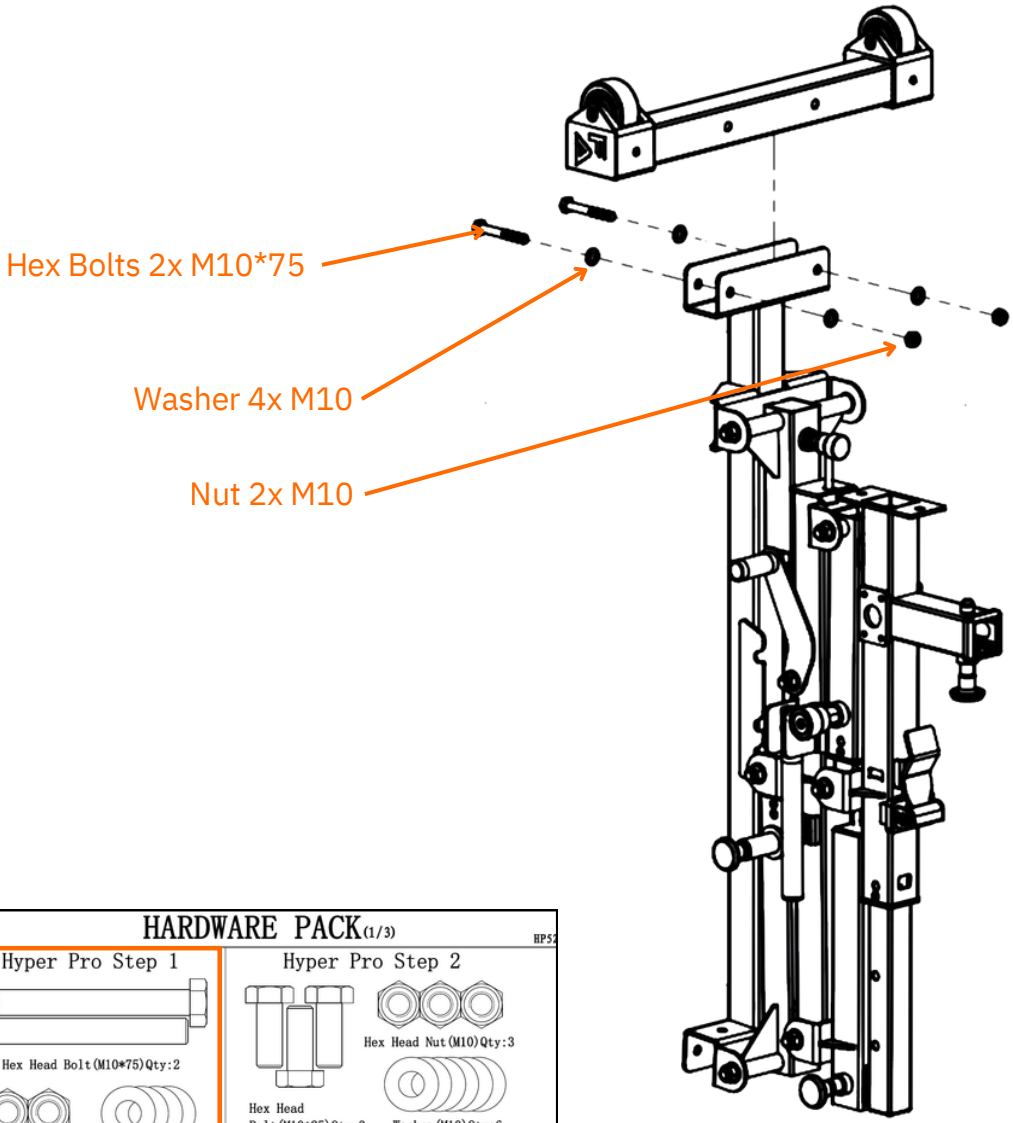

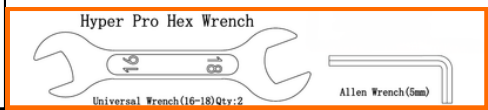

Steps 2: Foot Plate and Vertical Storage Bar Installation	Hardware & Parts
1. Keep the Main Frame on upright postion. 2. Lined up the Middle and bottom holes of the foot plate to the holes on the Main Frame. 3. Fasten the Bottom hole (hand tight only) 4. Place the Vertical Storage bar to the Foot Plate, aligning the Top and middle holes. 5. Fasten the Footplate and Vertical Storage Bar to the Main Frame. 6. Fully tighten using Tools provided.	● Main Frame ● Foot Plate ● Vetical Storage bar

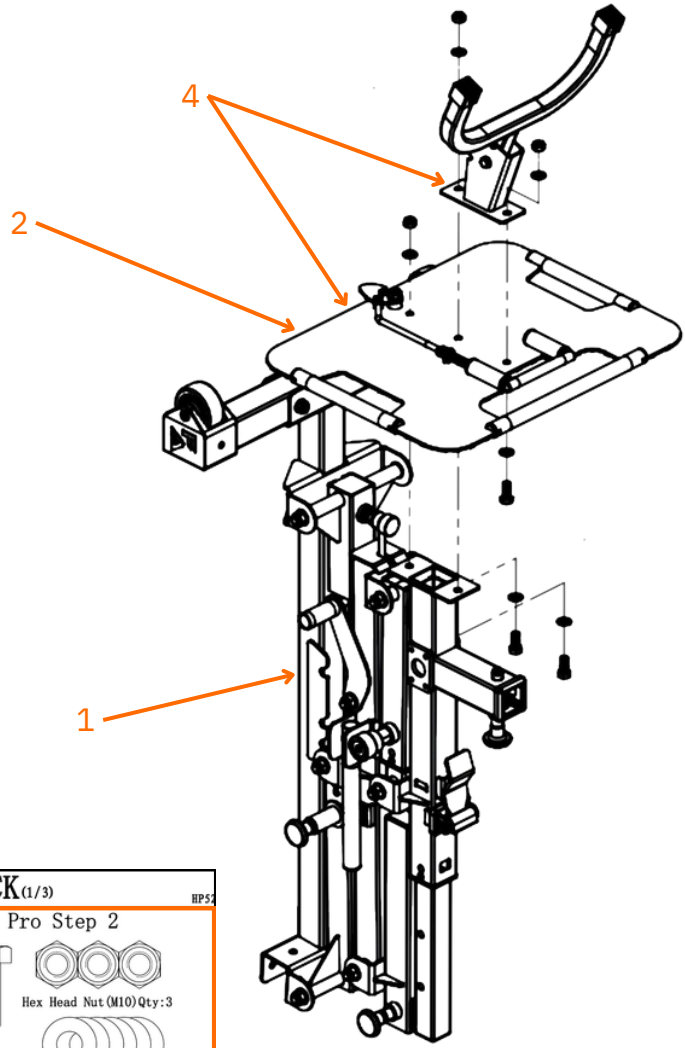

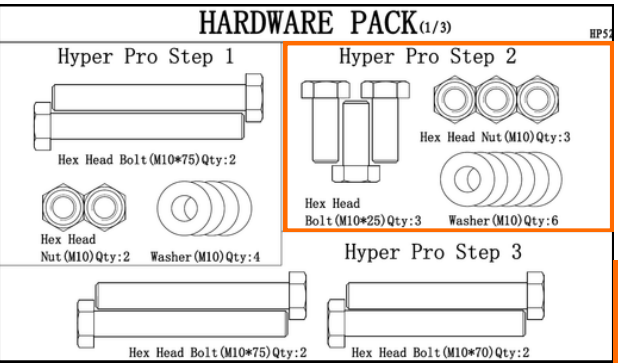

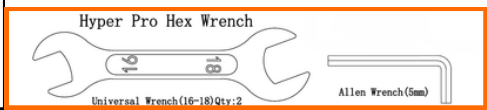

Steps 3: U-Base Installation	Hardware & Parts
1. Put the HPX in Vertical Storage Mode as show in the image below. 2. Put the U-base and align the holes accordingly. 3. Fasten the U-base using the Bolts, Nuts and Washers. 4. Place the Vertical Storage bar to the Foot Plate, aligning the Top and middle holes. 5. Fasten the Footplate and Vertical Storage Bar to the Main Frame. 6. Fully tighten using Tools provided.	● Main Frame ● U-Base

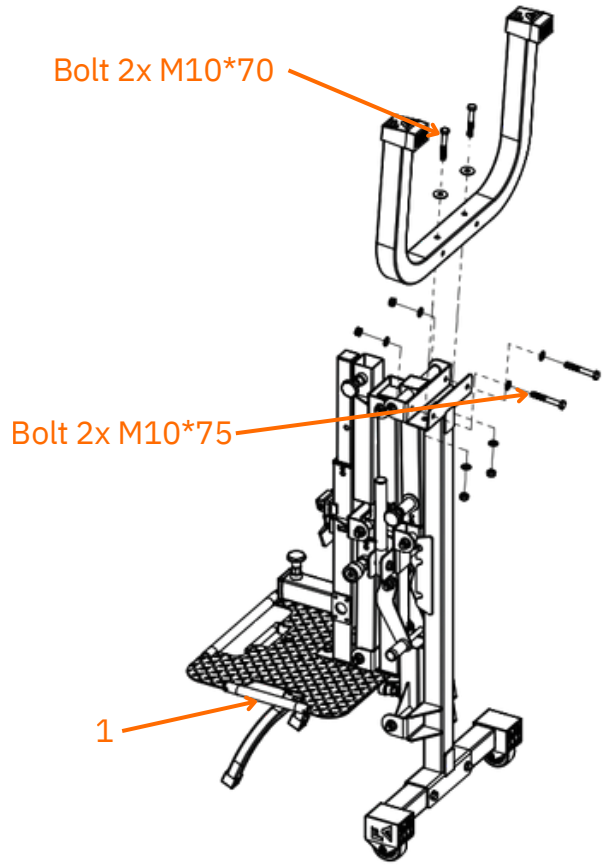

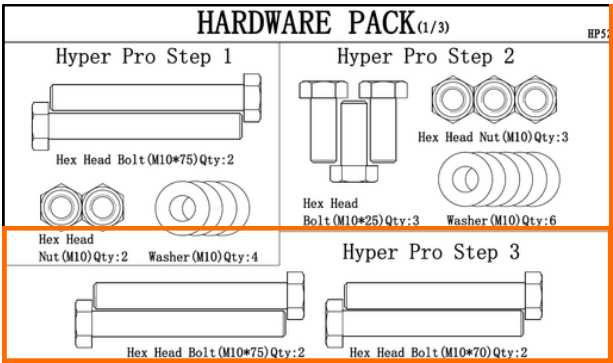

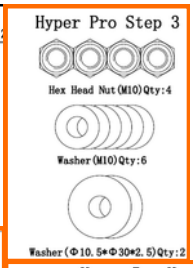

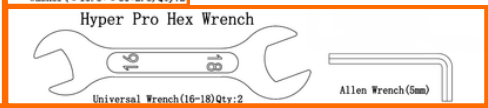

Steps 4: Back Extension Frame Installation	Hardware & Parts
1. Put the HPX in Flat Mode as show in the image below. 2. Put the Back Extension Frame to the Main Frame Adjustable Tube, aligning the 2 holes of each parts. (See Image below) 3. Fasten the Back Extension Frame using the Bolts, Nuts and Washers. 4. Fully tighten using the tools.	● Main Frame ● U-Base

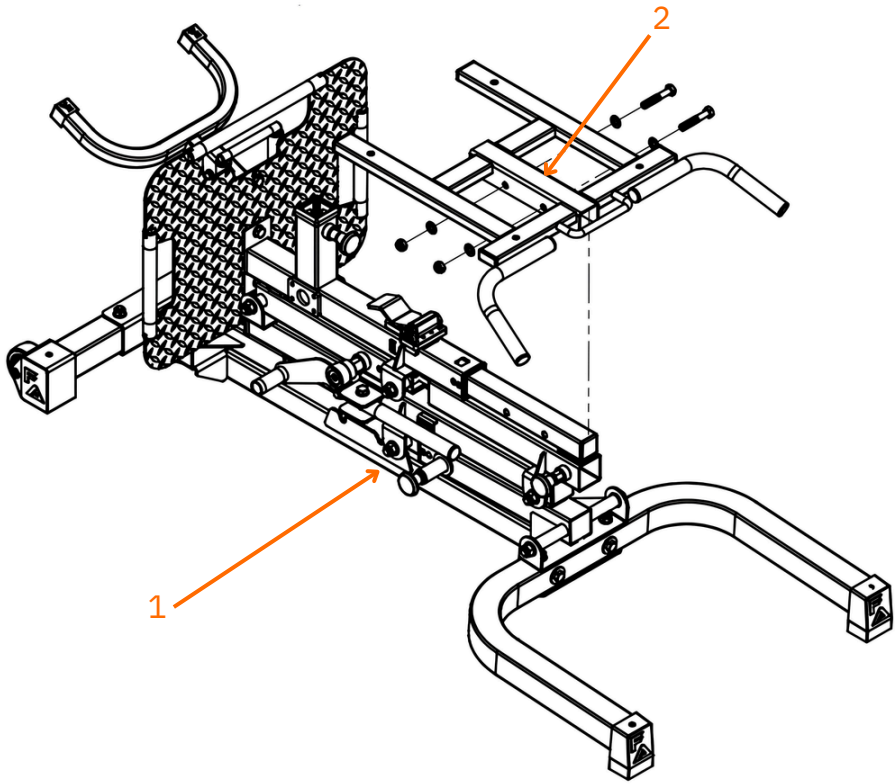

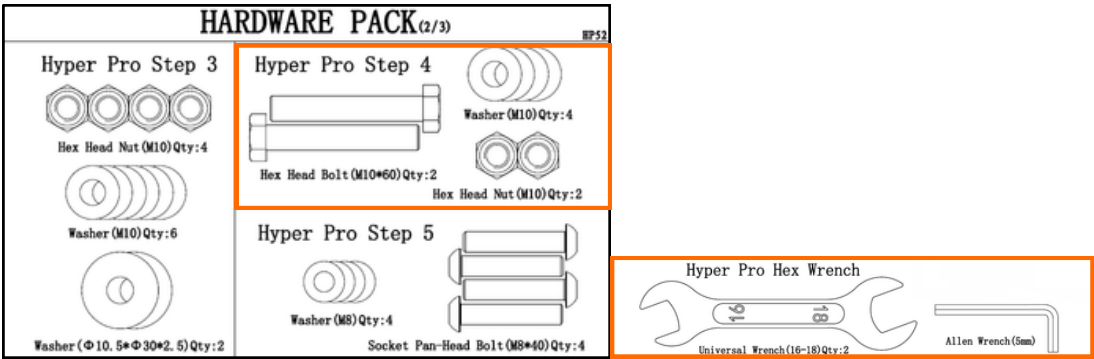

Steps 5: PadInstallation	Hardware & Parts
1. Assemble the Pad to the Back Extension Frame aligning the 4 holes. 2. Fasten using the bolts and washers.	● Main Frame ● Pad

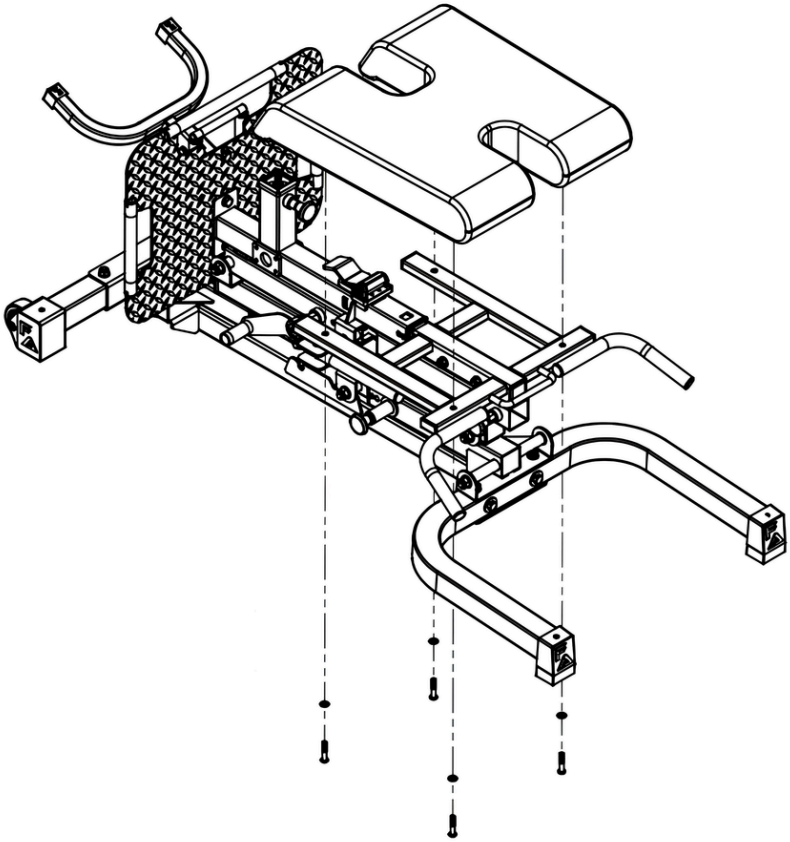

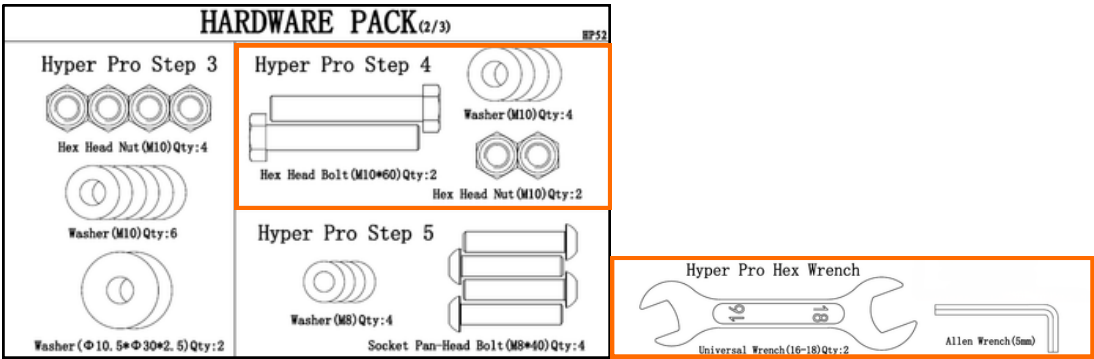

Steps 6a: Ankle Rollers Installation	Hardware & Parts
1. Assemble the Round Foam Round Tube to the Top Base of HPX on both location (Left and Right). 2. Fasten using the Socket Pan Head Bolt 4x (M8*10NL) on both sides.	● Main Frame ● Pad

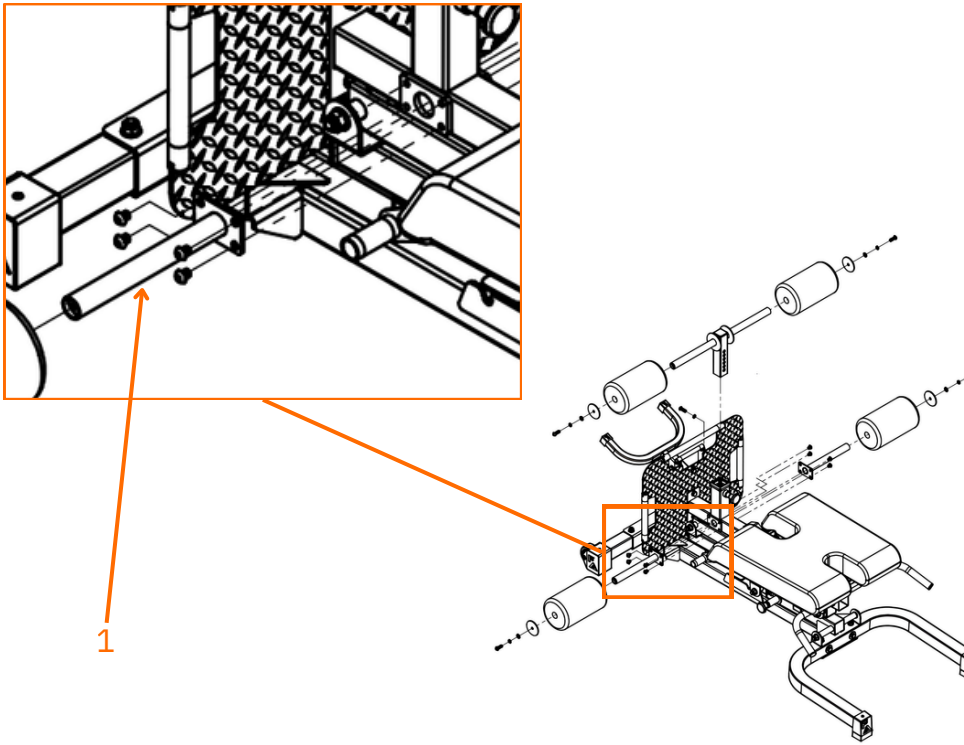

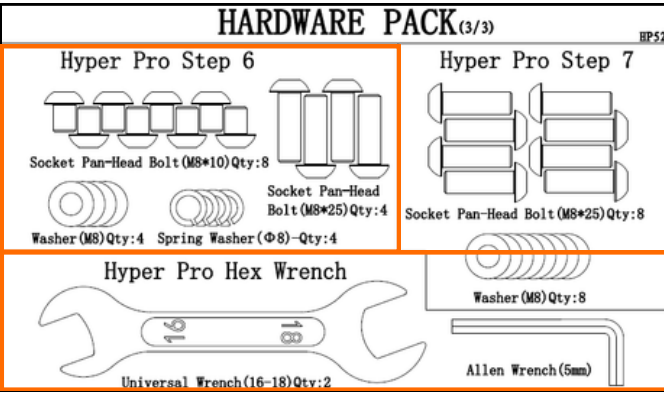

Steps 6b: Ankle Rollers Installation Installation	Hardware & Parts
1. Insert the Foam to the round tube then the Big Washer 2. Fasten using the Washer, Spring Washer and Pad-head Bolt respectively. 3. Repeat the process on other side.	● Main Frame ● 4x Ankle Rollers Foam ● Ankle Roller Round Tube ● Ankle Roller Male Tube

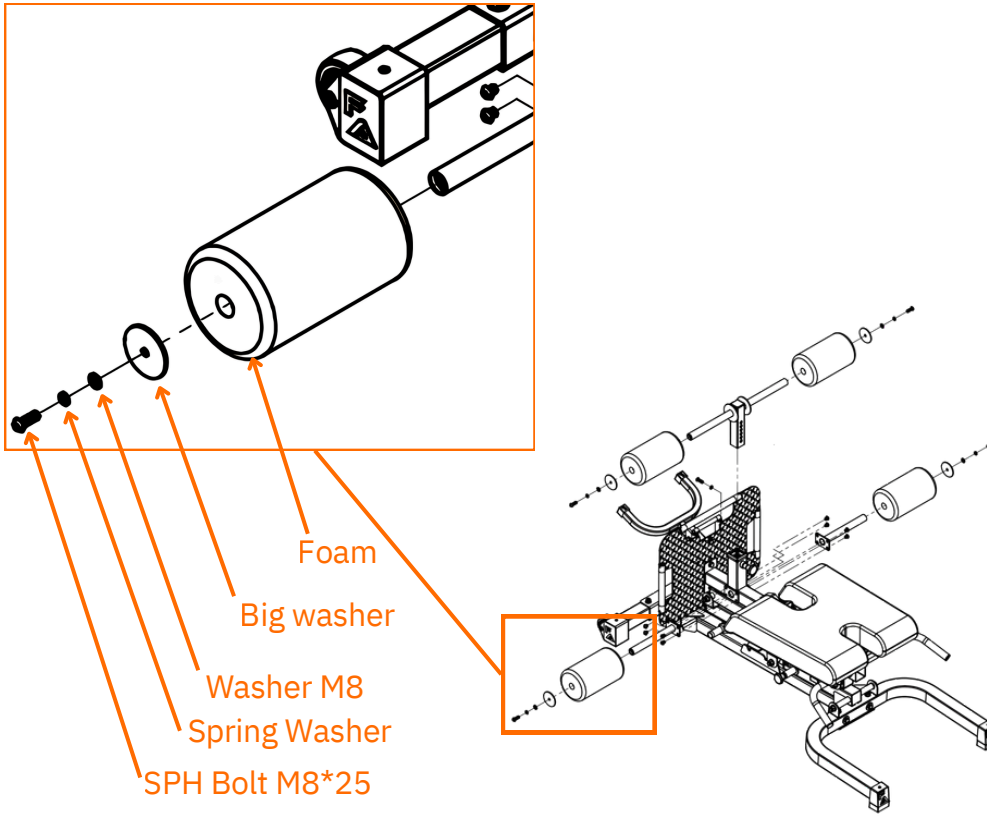

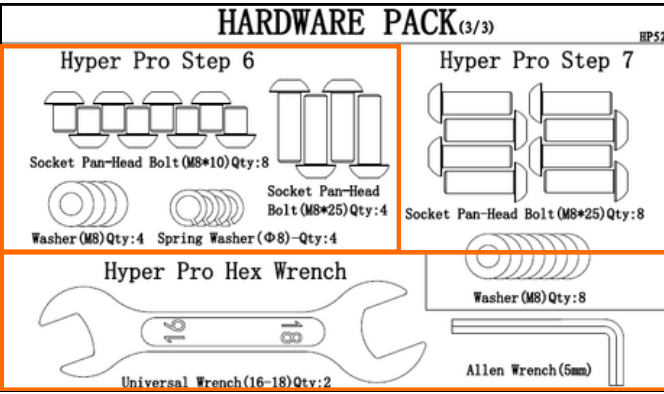

Steps 6c: Ankle Rollers Installation Installation	Hardware & Parts
1. Insert the Foam to the round tube of the adjustable square tube then the Big Washer 2. Fasten using the Washer, Spring Washer and Pad-head Bolt respectively. 3. Repeat the process on other side.	● Main Frame ● 4x Ankle Rollers Foam ● Ankle Roller Round Tube ● Ankle Roller Male Tube

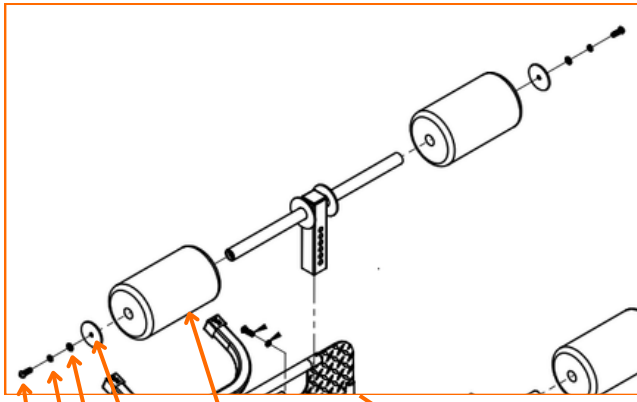

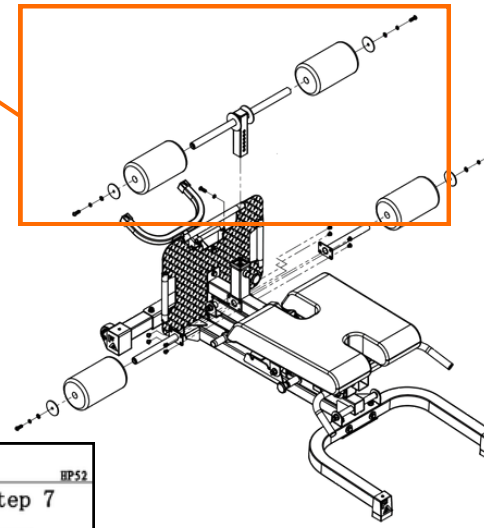

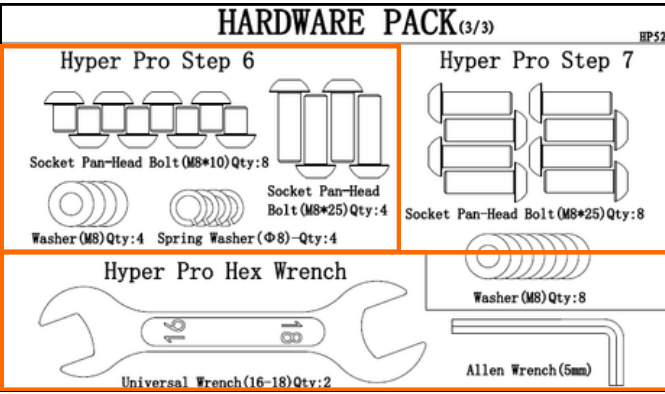

Steps 7: GHD PAD Installation	Hardware & Parts
1. Assemble the GHD Pad to the GHD Main Frame. 2. Fasten using the Bolts and Washers. 3. Once assembled, assemble or unassemble the GHD to the HPX whenever is needed.	● Main Frame ● GHD Main Frame ● GHD Pad

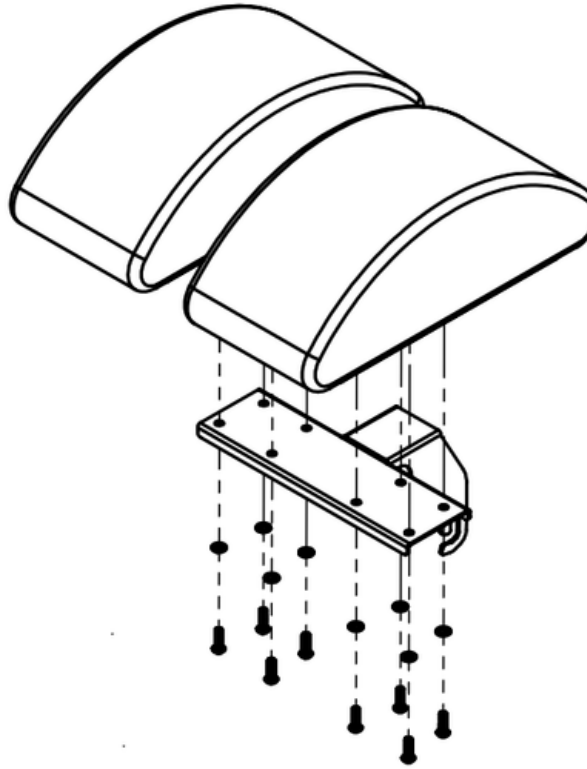

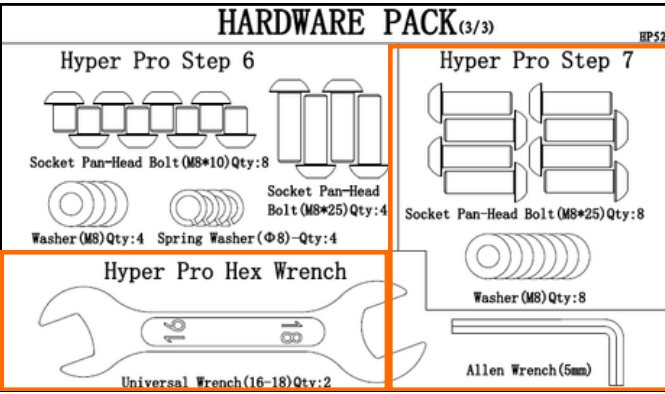

FREAK ATHLETE

ABX + LD Assembly Guide

Important Notice

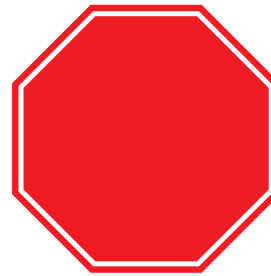

The written instruction manual is meant to be a supplement to the ABX Assembly video and Getting Started Video.

Go to *FreakAthlete.co/ABXGuide* for full video instructions.

It is critical to follow the full Assembly Video and the Getting Started video for your own safety.

FREAK ATHLETE

ABX Guide

ABX
Full Assembly

ABX
Getting Started

LDA Assembly Step 1: U-base to Vertical Tube	Hardware & Parts
	1. U-base 2. Vertical Tube 3. 2x Hex Head Bolt M10x25 4. 2x Hex Head Bolt M10x75 5. 2x M10 Nut 6. 6x Flat Washer M10x2 7. 2x Spring Washer M10

1. **Align the U-base and the vertical Tube.**

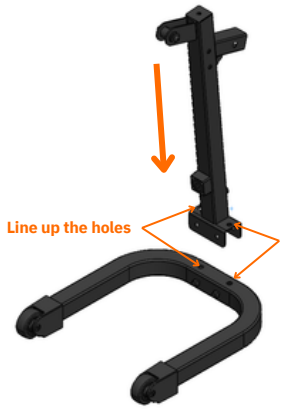

2. **Fasten using M10x75 Hex Bolt wtih Washer from the back partner with M10nut with washer, hand tight only.**

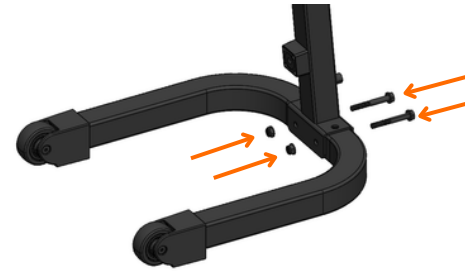

3. **Fasten using M10x25 Hex Bolt, Spring Washer and M10 washer.**

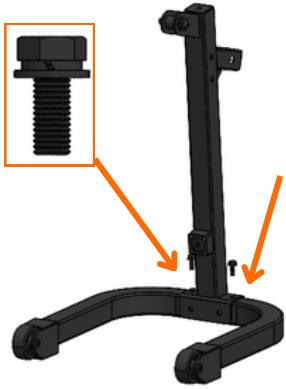

4. **Get your Wrench and fully tighen everything**



LDA Assembly Step 2: Flat Pad to main Frame	Hardware & Parts
	1. Flat pad 2. Main Frame 3. 2x Hex Head Bolt M10x70 4. 2x M10 Nut 5. 4x Flat Washer M10

1. **Attach the Flat Pad to the Main Frame.**

Note: Make sure that the flat pad handle is opposite to the U-Base of the main Frame.



2. **Line up the long bolt on the side, then put the nut and washer on the other side, hand tight only.**

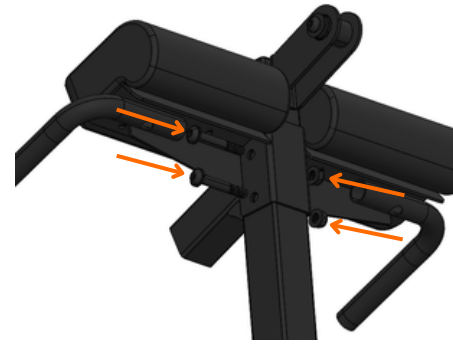

3. **Using the allen key and wrench, fully tighten the bolt and nut.**



LDA Assembly Step 3: Moving Frame to Main Frame	Hardware & Parts
	1. Main Frame 2. Loading Bar Section 3. Foam Roller

1. **Remove the pre-installed bolt and nut from the main frame.**

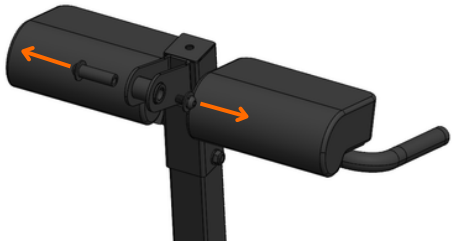

2. **Line up the the holes of the moving frame to the main frame.**





LDA Assembly Step 3: Moving Frame to Main Frame	Hardware & Parts
	1. Main Frame 2. Loading Bar Section 3. Foam Roller

5. **Lift up the moving frame.**

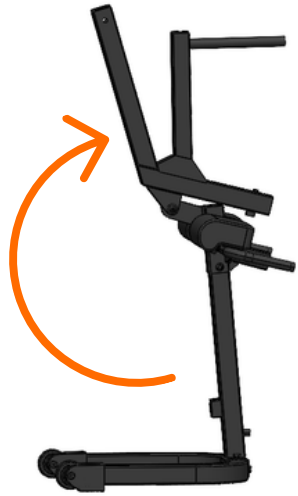

6. **Insert the roller pad, make the sure the pullpin is aligned with the holes.**





LDA Assembly Step 4: Hamstring Tube to Main Frame	Hardware & Parts
	1. Main Frame 2. Aluminum Tube 3. Round Tube 4. Roller Pad

1. **a. Unscrew the bolt underneath the moving frame.**
   b. Insert the aluminum tube, make sure the slot is facing the down and aligned to the bolt, tighten the bolt to avoid the aluminum tube from scaping.

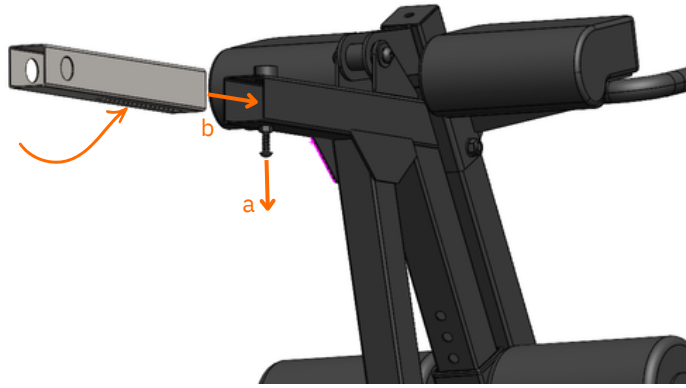

2. **Insert the round tube to the holes of the aluminum tube.**

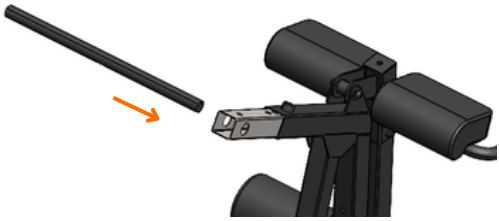

Note: Make sure the 2 holes align.

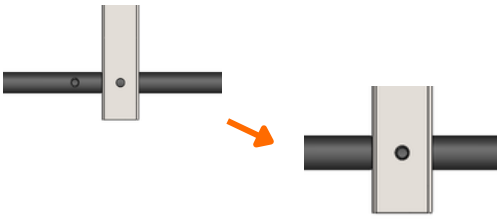

3. **Fasten using the bolt, then fully tighten using the allen key.**

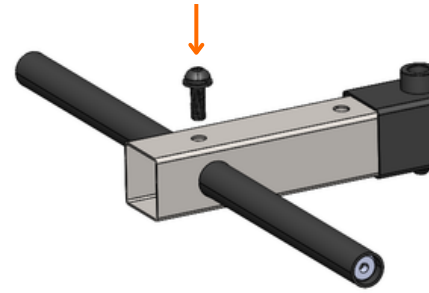

LDA Assembly Step 4: Hamstring Tube to Main Frame	Hardware & Parts
	1. Main Frame 2. Aluminum Tube 3. Round Tube 4. Roller Pad

4. **Insert the Round Metal Stoppers and Roller Pads**



5. **Lock using Big Washer, Washer, Spring Washer and bolt, use the allen key to full tigthen.**





Step 5: Handle Intallation and LDA Installation to ABX	Hardware & Parts
1. Handle installation 2. Setting the ladder to 15 degrees (LD)	● ABX ● Handles

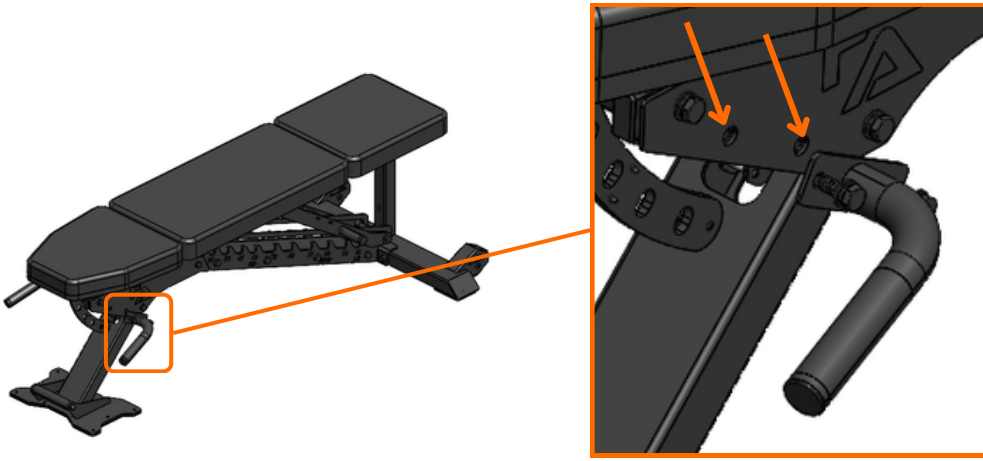

1. Remove the bolt & washers on 2 locations then bring back together wit the handle on both sides of the ABX.

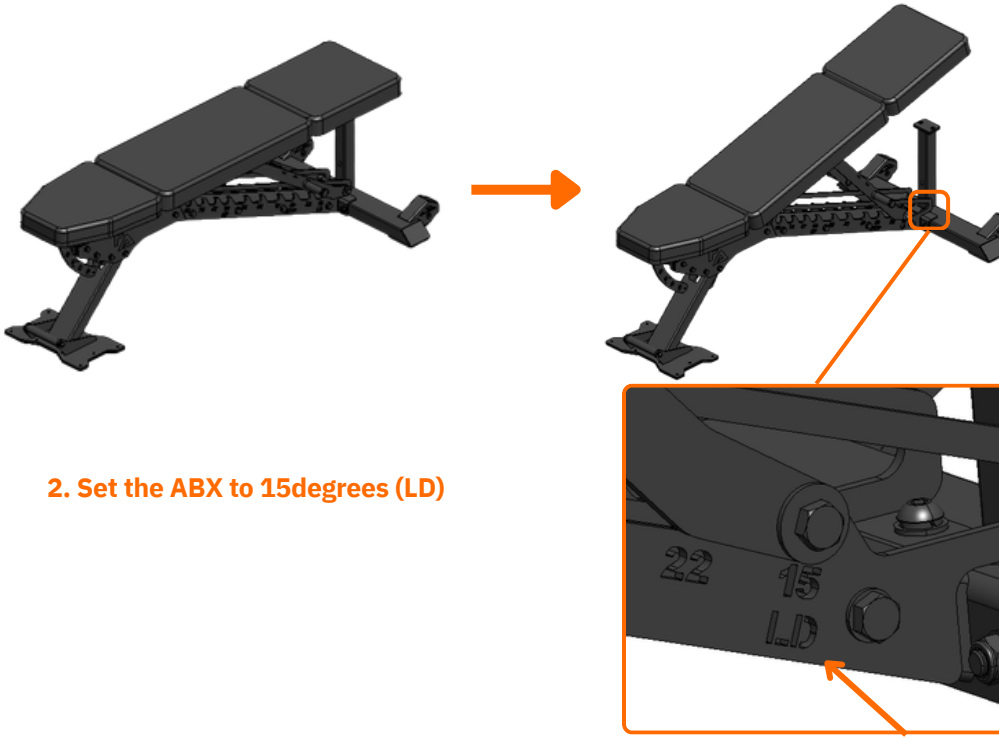

2. Set the ABX to 15degrees (LD)

LDA Installation	Hardware & Parts
3. a Position the ABX and LD, the square tube of the LD is facing the Square tube of the Headrest. 3. b Install the LD to the ABX.	● ABX with handles ● LD

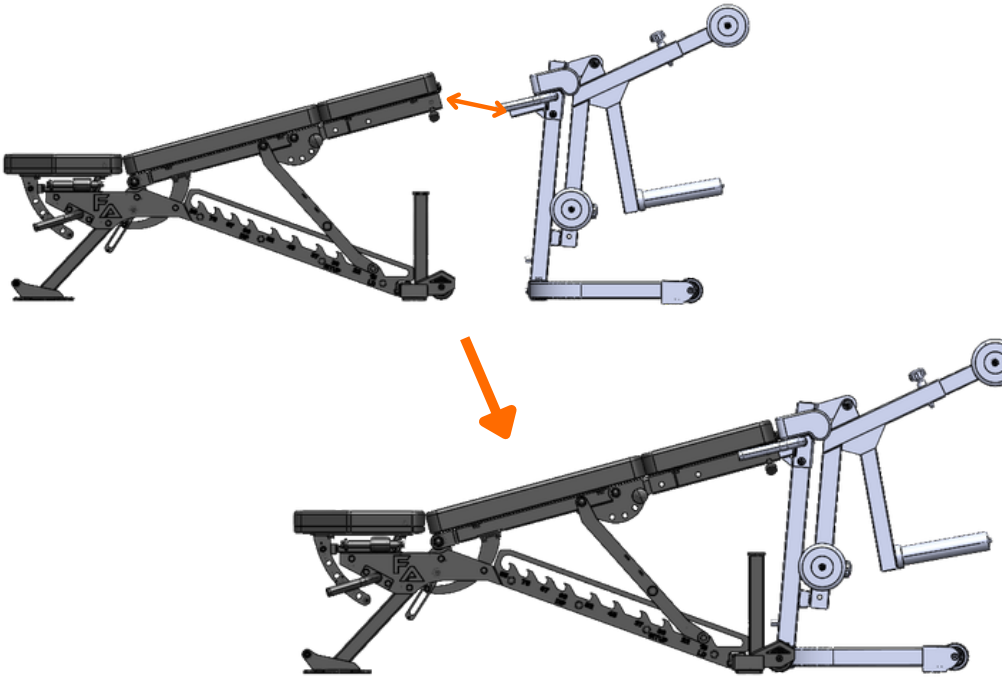

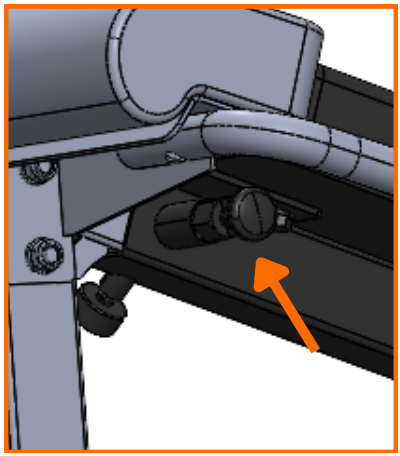

4. Use this Pin to lock the LD to the ABX

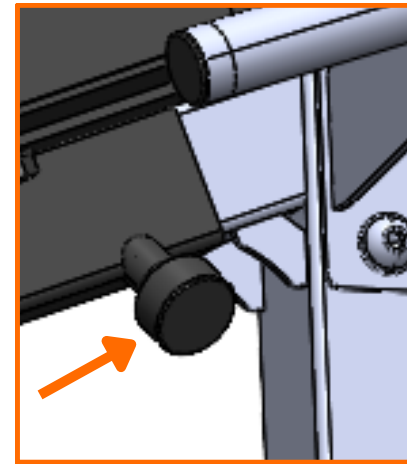

5. Use this Pin to tighten the LD.

	Hardware & Parts
ABX + LD	● ABX with handles ● LD



FREAK ATHLETE

ABX+Situp Attachment Assembly Guide

Important Notice

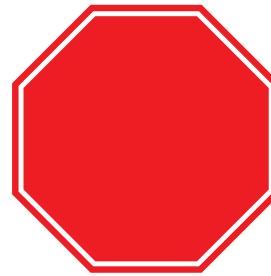

The written instruction manual is meant to be a <u>supplement</u> to the ABX Assembly video and Getting Started Video.

Go to *<u>FreakAthlete.co/ABXGuide</u>* for full video instructions.

It is critical to follow the full Assembly Video and the Getting Started video for your own safety.

SITUP Attachment Installation	Hardware & Parts
1. Put the Ladder on 30degrees (SITUP). configuration. 2. a Position SITUP attachment to ABX, the square tube of the SITUP attachment is facing the Square tube of the Headrest. 2. b Install the SITUP attachment to the ABX.	● ABX ● SITUP Attahcment

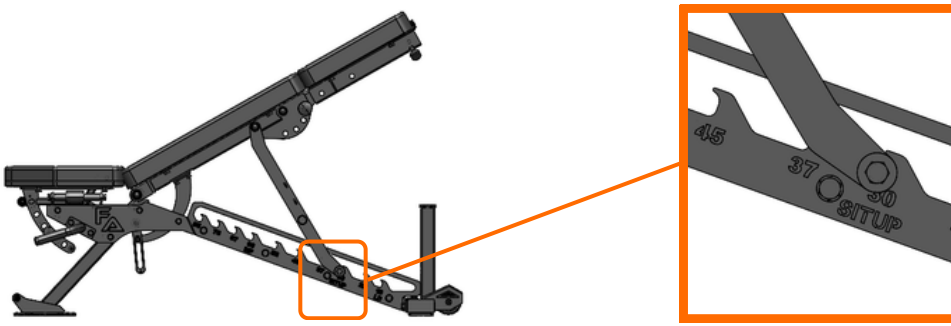

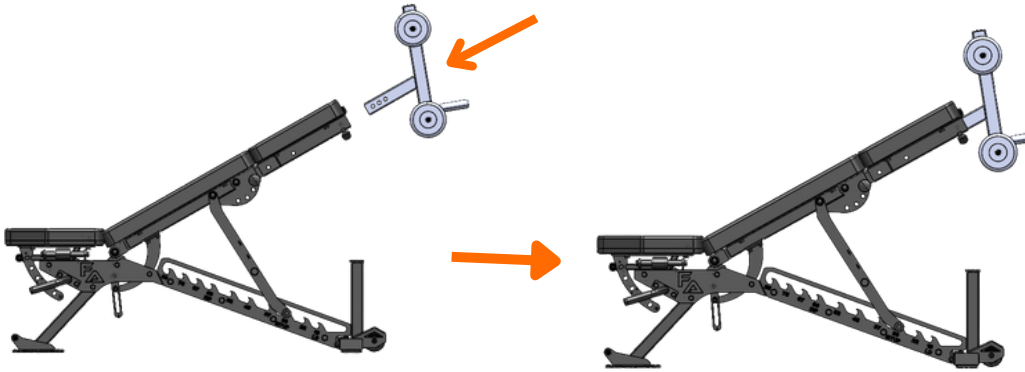

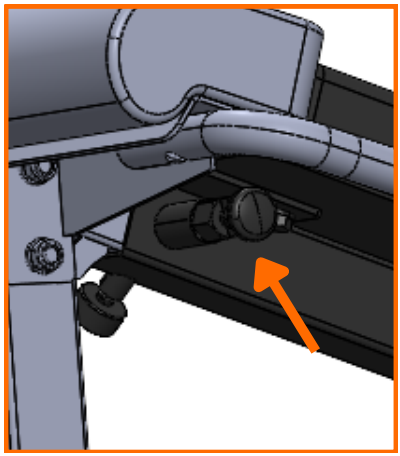

3. Use this Pin to lock the SITUP attch to the ABX

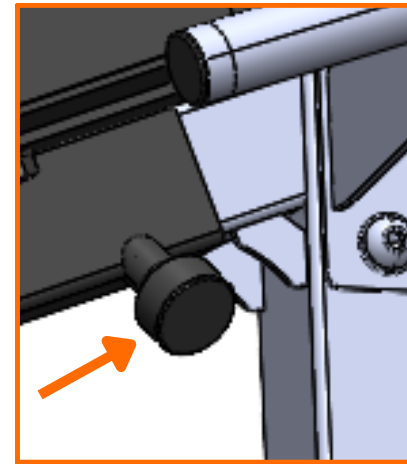

4. Use this Pin to tighten the SITUP Attch.

	Hardware & Parts
# ABX+SITUP Attachment	● ABX ● SITUP Attahcment



FREAK ATHLETE

ABX+Dips Attachment Assembly Guide

Important Notice

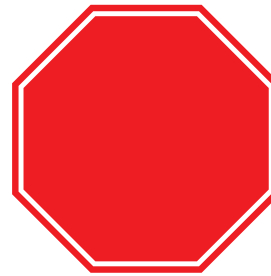

The written instruction manual is meant to be a supplement to the ABX Assembly video and Getting Started Video.

Go to *FreakAthlete.co/ABXGuide* for full video instructions.

It is critical to follow the full Assembly Video and the Getting Started video for your own safety.

DIPS Attachment Installation	Hardware & Parts
1. Put the Ladder on 60degrees (DIPS) configuration. 2.a Position DIPS attachment to ABX, the square tube of the DIPS attachment is facing the Square tube of the Headrest. 2.b Install the DIPS attachment to the ABX.	● ABX ● DIPS Attahcment

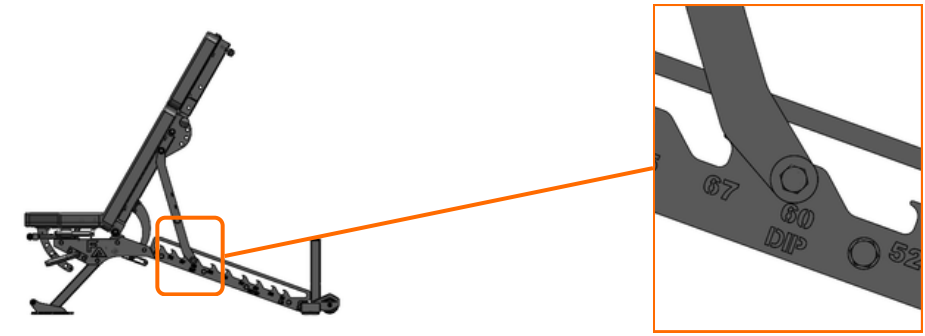



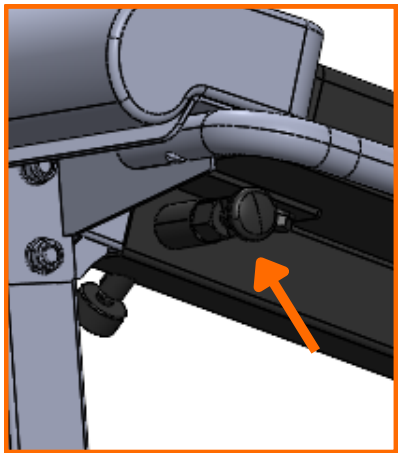

3. Use this Pin to lock the SITUP attch to the ABX

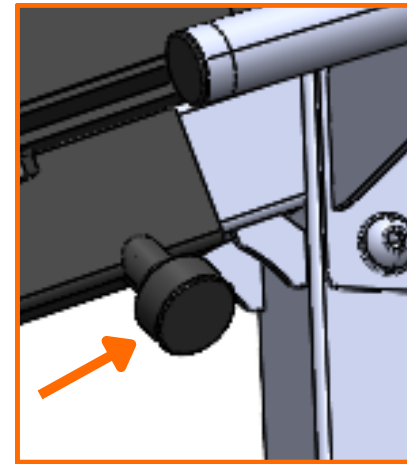

4. Use this Pin to tighten the SITUP Attch.

ABX+DIPS Attachment

Hardware & Parts

- ABX
- DIPS Attahcment



FREAK ATHLETE

ABX+Dips Attachment Assembly Guide

Important Notice

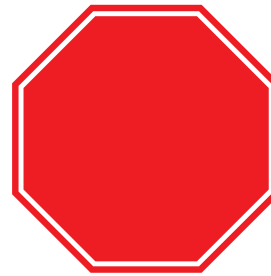

The written instruction manual is meant to be a supplement to the ABX Assembly video and Getting Started Video.

Go to *FreakAthlete.co/ABXGuide* for full video instructions.

It is critical to follow the full Assembly Video and the Getting Started video for your own safety.

BCF Installation	Hardware & Parts
1. Put the Ladder on 52degrees configuration. 2. a Position BCF attachment to ABX Headrest Tube underneath. 2. b Install the BCF attachment to the ABX. Lock the BCF using the Pin. 3. Pull down the Headrest at 90 degrees or on desired angle. 4. Lock position using the Pin.	● ABX ● BCF

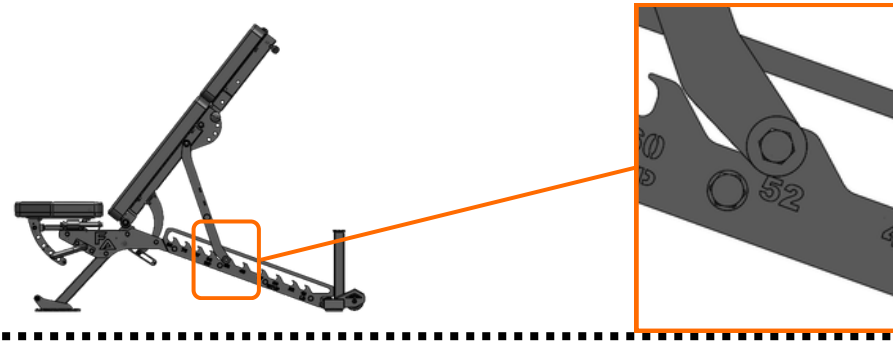

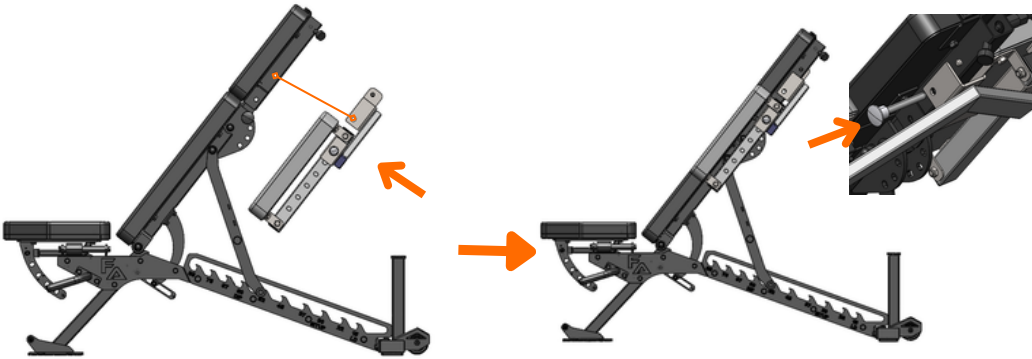



3. Pull the down the Headrest

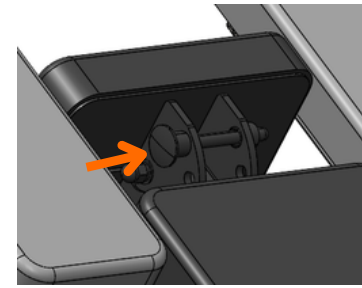

4. Lock position using the pin.

	Hardware & Parts
ABX+BCF Attachment	● ABX ● BCF

